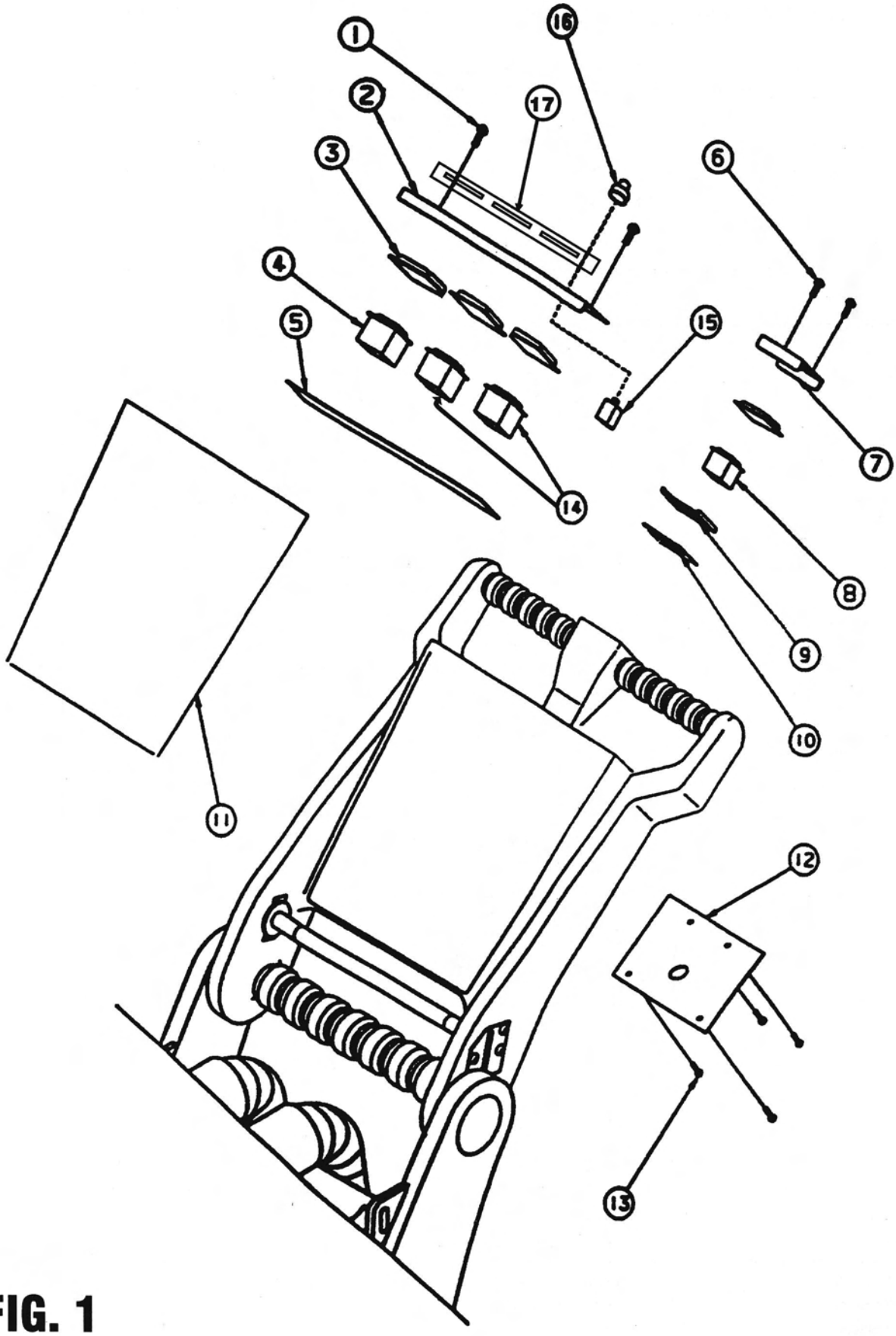

FIG. 1

EDIC PARTS LIST

ITEM #	PART #	DESCRIPTION	QTY.	FIG.
1	COO311	8-32 X 3/8 ROUNDHEAD MACHINE BLACK PHILLIPS SS	2	1
2	D10483	PLATE, MNTNG, SWITCHES, 115V, GREY	1	1
2A	D10713A	ASSY., SWITCHPLATE W/SILKSCREEN LABEL (3 SWITCHES)	1	1
2B	D10998A	ASSY., SWITCHPLATE W/SILKSCREEN LABEL (1 SWITCH)	1	1
3	B00214-2	COVER, SWITCH, ROCKER	2/3	1
4	B00188	SWITCH, ROCKER, DPDT BLACK	1	1
5	E10698	GASKET, SWITCHPLATE, EVA, ADHESIVE BACKED, 3 GALLON UNIT	1	1
6	C10739	SCREW, 6-32 X 5/8, PHIL. PH. BLACK OXIDE	2	1
7	D10481	PLATE, MNTNG, MOMENTARY SWITCH, WHITE EPOXY FINISH	1	1
7A	D10481-1	PLATE, MNTNG, MOMENTARY SWITCH, GREY EPOXY FINISH	1	1
8	B10513	SWITCH, PUSHBUTTON, 250V DP, N/O 12 AMP.	1	1
9	D10590-1	PLATE, MOMENTARY, MOMEN, EPOXY GREY	1	1
10	E10705	GASKET, MOMENTARY	1	1
11	H10518	LABEL, INSTRUCTION	1	1
11A	H10518-1	LABEL, INSTRUCTION (400TR)	1	1
11B	H10518-2	LABEL, INSTRUCTION (GENERIC)	1	1
11C	H10518-3	LABEL, INSTRUCTION (FP)	1	1
11D	H10518-4	LABEL, INSTRUCTION (EW)	1	1
12	D10496	PLATE, COVER, MNTG, POWER CORD, BLACK	1	1
13	COO311	8-32 X 3/8 ROUNDHEAD MACHINE BLACK PHILLIPS SS	4	1
14	B02211-1	SWITCH, ROCKER, LIT GREEN, 115 / 230V, 20A	1/2	1
15	B10554	CIRCUIT BREAKER, 1.2 AMP., 250 VAC, RESETTABLE	1	1
16	B02193	CIRCUIT BREAKER SEAL	1	1
17	H10509	LABEL, SWITCH PLATE, (2 SWITCHES)	1	1
17A	H10726-4	LABEL, SWITCH PLATE. (EW)	1	1
17B	H10699	LABEL, SWITCH PLATE, (3 SWITCHES)	1	1
NOT SHOWN	B10509	HOUR METER	1	1

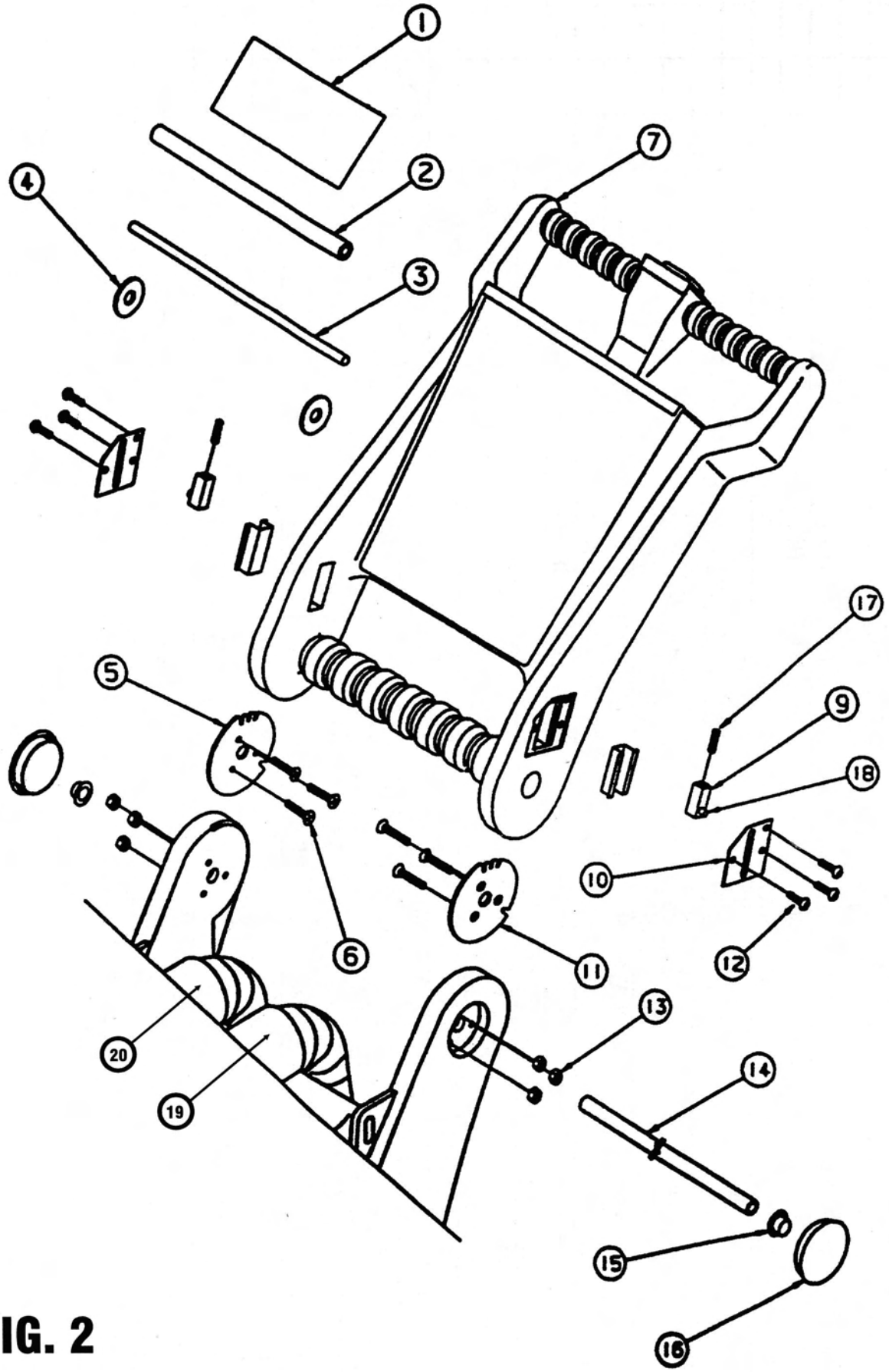

FIG. 2

EDIC PARTS LIST

ITEM #	PART #	DESCRIPTION	QTY.	FIG.
1	H10777	LABEL, HANDLE ADJUST, BAIL HANDLE	1	2
1A	H10777-1	LABEL, HANDLE ADJUST, MULTILINGUAL	1	2
2	F10691	TUBE, PULL LOCK, 1/4 X 6.75 PVC, BLACK	1	2
3	D10479	ROD, PULL LOCK, PLATED, .025 X 7.750, ZINC PLATED	1	2
4	C10730	WASHER, NYLON, 1.25“ OD, .281” ID, .063 THICK	2	2
5	D10485	DISK, LOCKING, HANDLE, RT, COUNTERSUNK AND ZINC PLATED	1	2
6	C90010	SCREW, 8-32 X 1“ PHILLIPS, PLATED ZINC	6	2
7	F10540-1	HANDLE, FAB, 3 GALLON UNIT, EDIC BLUE	1	2
7A	F10540	HANDLE, (400TR)	1	2
7A	F10540-2	HANDLE, PURPLE	1	2
7A	F10540-3	HANDLE, BLACK	1	2
7A	F10540-4	HANDLE, K-GREY	1	2
7A	F10540-5	HANDLE, K-BLUE	1	2
8	D10690	BRACKET, GUIDE LOCK, .050 ALUMINUM	2	2
9	F10689	SLIDE LOCK, NYLON	2	2
10	D10487	PLATE, COVER, LOCKING MECHANISM, BLACK ANODIZED	2	2
11	D10486	DISK, LOCKING, HANDLE LFT, COUNTERSUNK AND ZINC PLATED	1	2
12	C00311	8-32 X 3/8 ROUNDHEAD MACHINE BLACK PHILLIPS SS	6	2
13	C02320	8-32 NYLON LOCKNUT SS	6	2
14	D10508	TUBE, HANDLE, 10.562 X .50 X .049 WALL, + - 1/16“ ON LENGTH	1	2
15	C02305	1/2 CAP NUT PUSH ON	2	2
16	K010142	HOLE PLUG, 2“, BLACK	2	2
17	D10494	SPRING, LOCKING MECHANISM	2	2
18	C10692	DOWEL PIN, SLIDE LOCK	2	2
19	J10744	HOSE CUFF, GREY, 1 3/4	1	2
20	J10744-1	HOSE CUFF, BLACK, 1 3/4	1	2
20A	J10745	HOSE CUFF, BLACK, 1 1/4 (400TR)	1	2

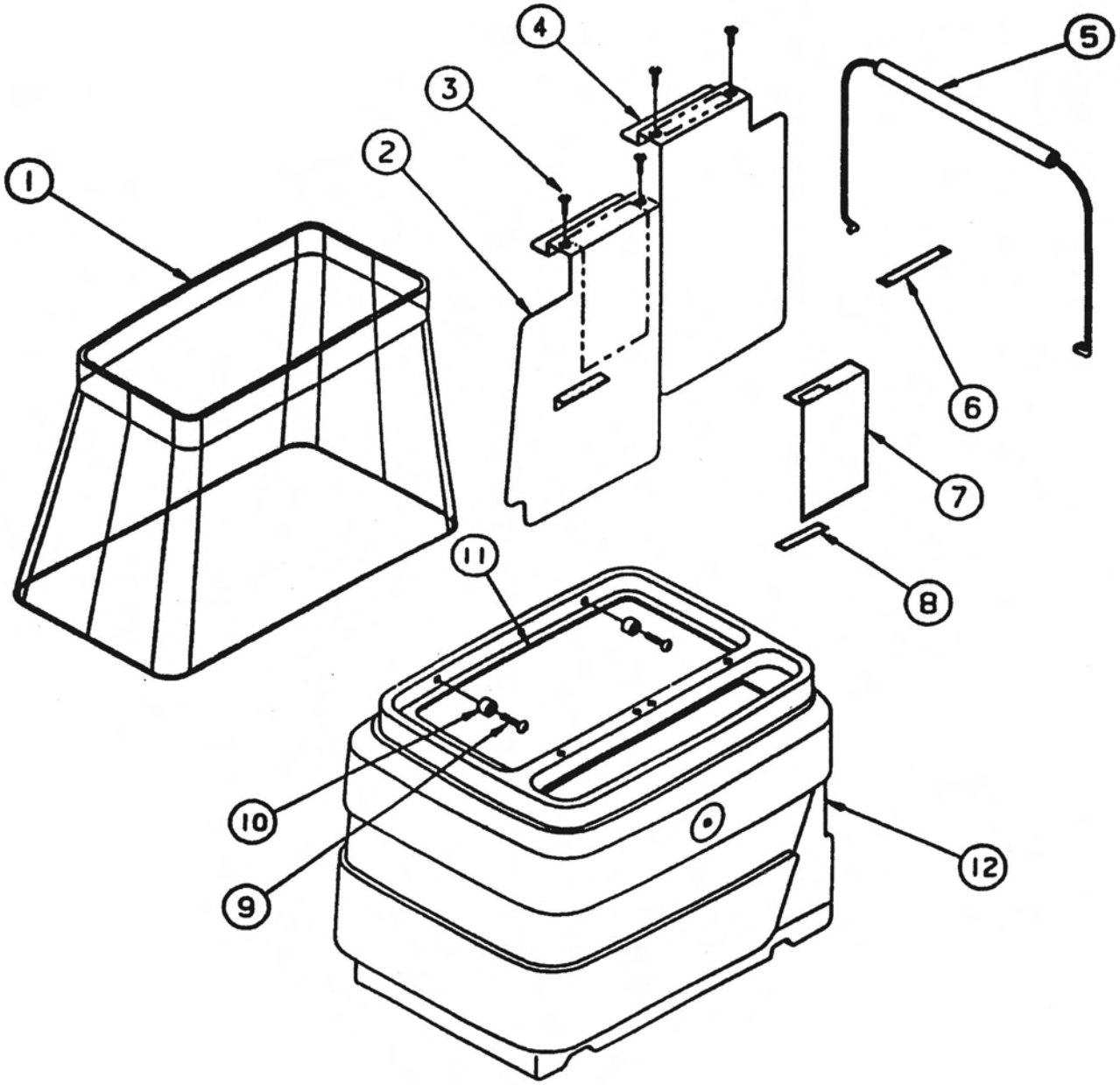

FIG. 3

EDIC PARTS LIST

ITEM #	PART #	DESCRIPTION	QTY.	FIG.
1	10490A	ASSY., BLADDER, 3 GALLON UNIT, ALL VERSIONS	1	3
2	D10760	PLATE, DIVIDER, BUCKET, FRONT, EPOXY GREY	1	3
3	C00307-12	8/32 X 1/2 FLATHEAD MACHINE PHILLIPS, STAINLESS STEEL	4	3
4	D10762	PLATE, DIVIDER, BUCKET, REAR, GREY EPOXY	1	3
5	D10452	ASSY., BAIL HANDLE1	1	3
6	H10572	LABEL, ANTI-FOAM SOLUTION	1	3
7	H10540	LABEL, CLEANING SOLUTION, DO NOT OVERFILL	1	3
8	H10571	LABEL, FILL LEVEL, TANK	1	3
9	C10737	SCREW 8-32 X 5/8, SS TRUSS HEAD, PHILLIPS	2	3
10	K00664	SPACER, NYLON, NATURAL 3/8 X .194 X 5/15	2	3
11	E10771	GASKET, BUCKET, .375 X 33 20 LB. PORON, .125“, W/5 MIL #300 3M ACRYLIC ADHESIVE #9672	1	3
12	F10539	BUCKET, FAB, LINEAR, GREY	1	3
12A	F10539-1	BUCKET, FAB, WHITE	1	3
12B	F10539-2	BUCKET, FAB, K- BLUE	1	3
12C	F10539-3	BUCKET, FAB,,K-GREY	1	3

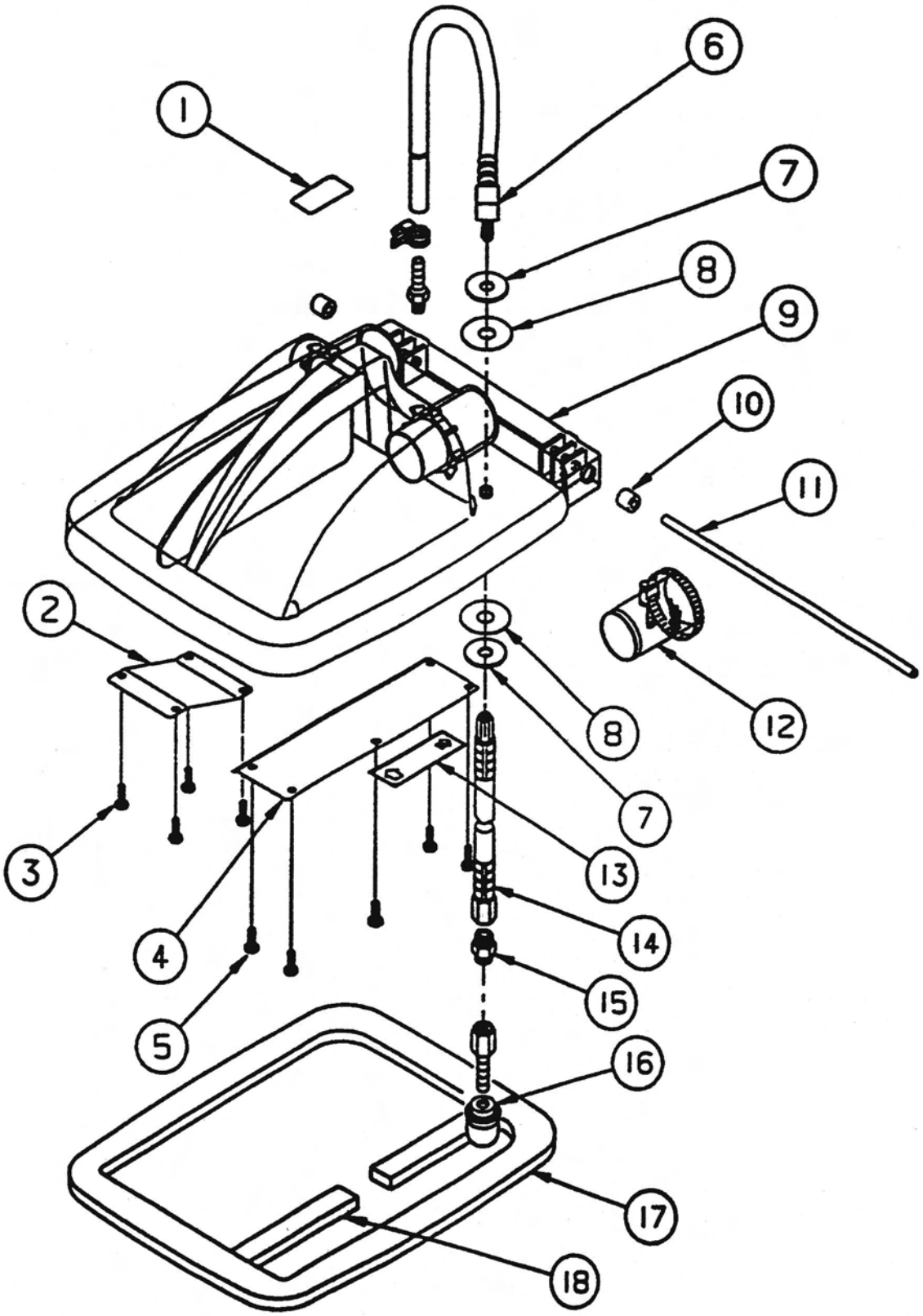

FIG. 4

EDIC PARTS LIST

ITEM #	PART #	DESCRIPTION	QTY.	FIG.
1	H10574	LABEL, PATENTS	1	4
2	D10768	PLATE, DEFLECTOR, DOME, .080 ALUMINUM	1	4
3	C00324-38	6/32 X 3/8 ROUNDHEAD MACHINE PHILLIPS, STAINLESS STEEL	7	4
4	D10761	PLATE, LID GASKET, 7.859 X 2.03 X .080 5052-H32 ALUMINUM	1	4
5	C02238-38	6/32 X 3/8, SCREW, S/S, FLATHEAD, MACHINE SCREW	2	4
6	10780A	ASSY., HOSE, PUMP TO DOME	1	4
7	C10503	WASHER, FLAT, 1" X .048" X .437 ID, STNLS	2	4
8	E10504	GASLET, RUBBER, 1" X .032 X .437 ID, 35 SHORE, PURE GUM	2	4
9	F10454	DOME, INJECTION MOLDED	1	4
9A	F10534	DOME, INJECTION MOLDED (400TR)	1	4
10	E10732	TUBE, LATEX, 1/4" ID, 1/8" WALL, 1/2' LENGTH, DOME	2	4
11	D10524	SHAFT, DOME HINGE, .250 X 10.50, 6061 T6 ALUMINUM	1	4
12	D10767	FILTER, AIR FLOW, 1-1/2 X 2-1/2", STAINLESS STEEL #20 MESH, 70% OPEN 9.5 WIRE DIA.	1	4
13	H10565	LABEL, KEEP FILTER SCREEN CLEAN, DOME	1	4
14	10543A	ASSY., HOSE W/FILTER, CHK VALVE,	1	4
15	G10731	CHECKVAVLE	1	4
16	D10478	FILTER SCREEN, BUCKET 50 X 50 MESH, .008 304 STAINLESS WIRE, 36% OPEN	1	4
17	E10533	GASKET, DOME, PORON 4701-12-20250-1604, W/IF 2013 P.S.A. ONE SIDE	1	4

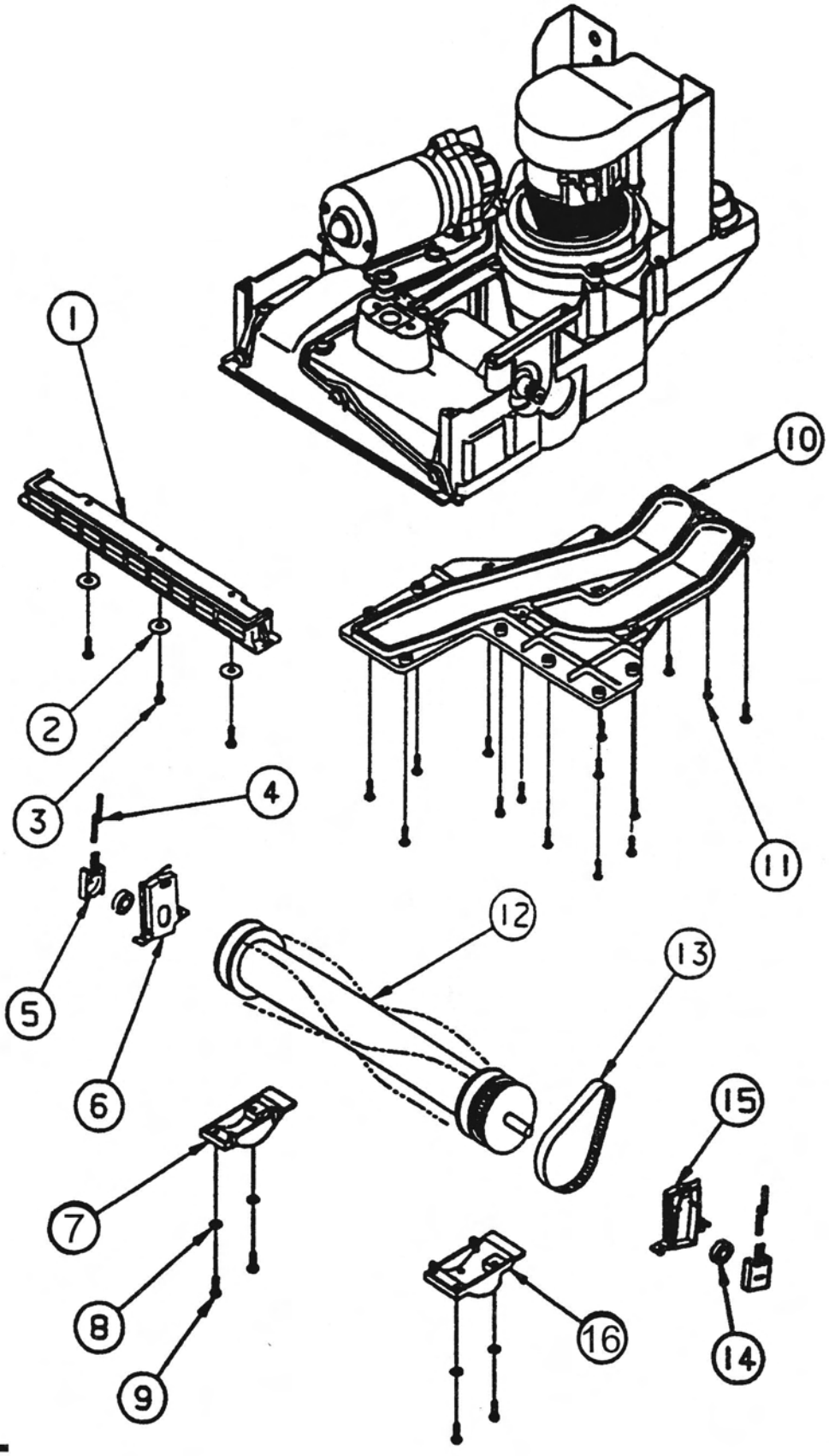

FIG. 5

EDIC PARTS LIST

ITEM #	PART #	DESCRIPTION	QTY.	FIG.
1	F10474	SHOE, VACUUM, INJECTION MOLDED	1	5
2	C03251	#8 SAE WASHER SS	3	5
3	C00310-34	8/32 X 3/4 ROUNDHEAD MACHINE PHILLIPS	3	5
4	D10426	SPRING, BRUSH, 1.25 X .180 X .022, 5.2 LBS./IN, ZINC PLATED MATERIAL CERTIFICATION REQUIRED ON EACH SHIPMENT	4	5
5	F10410-1	SLIDE BLOCK, BRUSH BEARING, 3 GALLON UNIT	2	5
6	F10413	BRUSH RETAINER, LEFT, NON-BELT SIDE	1	5
7	F10423-1	BRUSH RETAINER COVER, LEFT, NON-BELT SIDE	1	5
8	C10736	WASHER, CUSHIONING, #8 X .312 OD X .150 ID, BRUSH ASSY.	4	5
9	C10737	SCREW, 8-32 X 5/8, SS TRUSS HEAD, PHILLIPS	4	5
10	F10430	COVER, BOTTOM, INJECTION MOLDED	1	5
11	C11020	SCREW, 8-16 X 1", PLASTITE PHILLIPS PAN HEAD	15	5
12	10420-3A	ASSY., BRUSH, 4 ROW, .12 BRISTLE, WITH PULLEY	1	5
13	L10448	BELT, 3 GALLON, 7MM X 300MM WITH 3MM PITCH, NEOPRENE, FIBERGLASS TENSION MEMBERS	1	5
14	10425	BEARING, BRUSH, 3 GALLON	2	5
15	F10422	BRUSH RETAINER, RIGHT, BELT SIDE	1	5
16	F10416-1	BRUSH RETAINER COVER, RIGHT, BELT SIDE	1	5
17	E03429-1	BOTTOM COVER GASKET	4	5
18	C03251	WASHER		

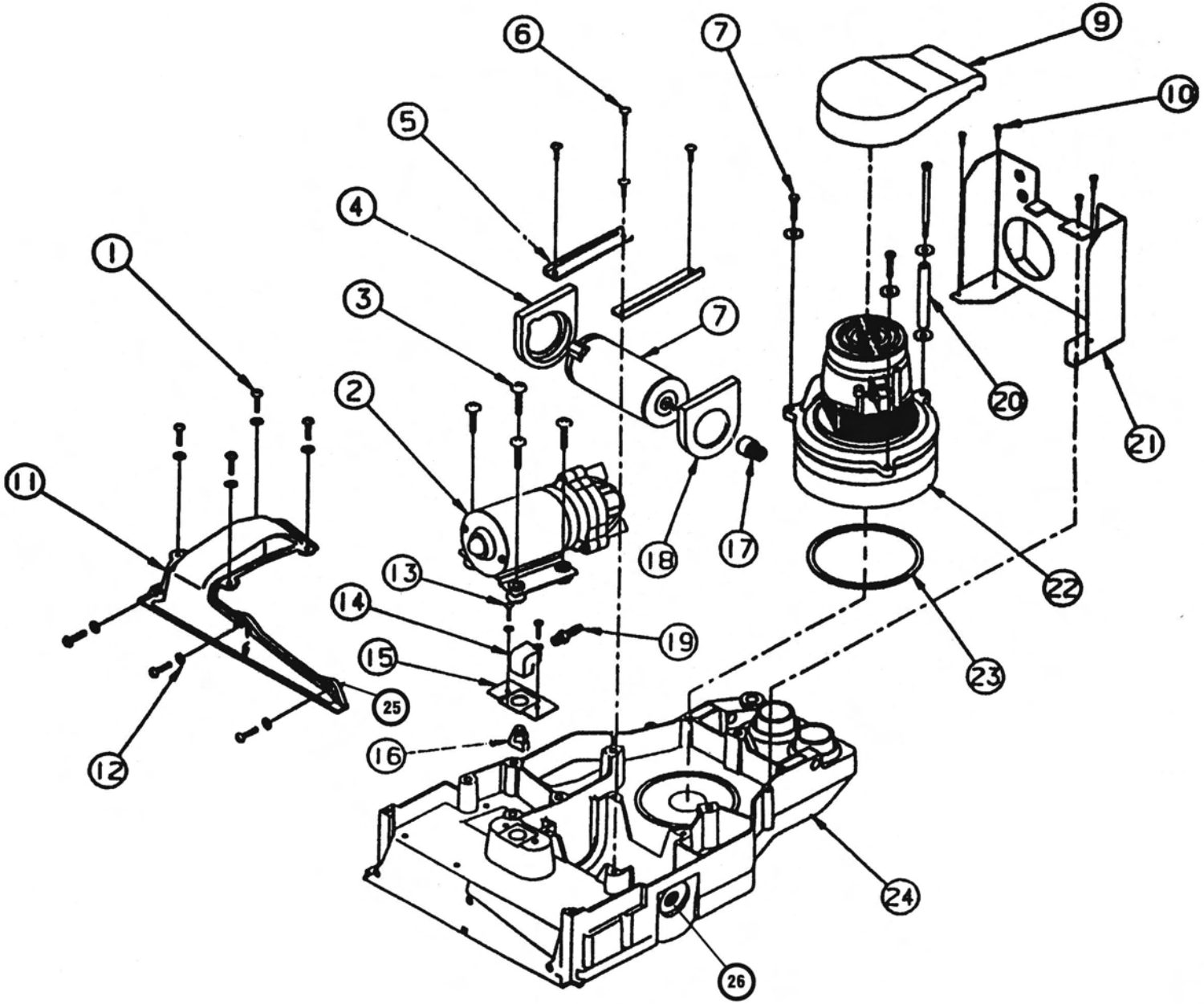

FIG. 6

EDIC PARTS LIST

ITEM #	PART #	DESCRIPTION	QTY.	FIG.
1	C10737	SCREW, 8-32 X 5/8, SS TRUSS HEAD, PHILLIPS	7	6
2	G10763	PUMP, 115V, SHURFLO, 1.4 GPM, W/BYPASS	1	6
3	C02308	1/4-20 X 1 ROUND HEAD PHILLIPS MACHINE SS	4	6
4	E10446	MOTOR MOUNT, REAR, FLOJET MOTOR, SANTOPRENE, 3 GALLON UNIT	1	6
5	D10447	CLAMP, BRUSH MOTOR	2	6
6	C10737	SCREW, 8-32 X 5/8, SS TRUSS HEAD, PHILLIPS	4	6
7	G10442	MOTOR, BRUSH, 115 VAC, 60H FLOJET	1	6
7A	G10441	MOTOR, BRUSH, 115 VAC, AMETEK (419TR)	1	6
8	10672A	ASSY., BOLT 1-1/4"	2	6
9	F10542	INTERCOOLER, BLACK	1	6
10	C10500	SCREW, 8-16 X 1', PLASTITE, PHILLIPS PAN HEAD	4	6
11	F10429	COVER, SUCTION, INJECTION MOLDED	1	6
12	C03251	BACKUP WASHER, 3/16 ID, .490 OD, ALUMINUM, .060 THICK	7	6
13	C00310-12	SCREW, 8-32 X 1/2, PHILLIPS PAN HEAD	2	6
14	A00073	90° ELBOW, 1/8 FP X 1/8 FP, BRASS	1	6
15	D10506	BRACKET, SPRAY NOZZLE, BLACK ANODIZED	1	6
16	A00089-6	SPRAY TIP, 1/8" X 11006	1	6
17	D10437	PULLEY, 16 TOOTH DIECAST ZAMAK 3	1	6
17A	D10438	PULLEY, 10 TOOTH (419TR)	1	6
18	E10445	MOTOR MOUNT, FRONT, FLOJET MOTOR, 3 GALLON UNIT	1	6
19	A00076	BARB 1/4" TO 1/8' MP, BRASS	1	6
20	10673A	ASSY., BOLT, 1/4 X 4"	1	6
21	D10475	BACKPLATE, BLACK	1	6
22	G00520-1	VACUUM 106", 115V 5.7, REVERSE FAN	1	6
23	E10521	GASKET, VAC MOTOR, 20 LB., PORON	1	6
24	F10427	CHASSIS, INJECTION MOLDED	1	6
25	E03429	LENS GASKET	4	6
26	G10758	BALL VALVE	1	6

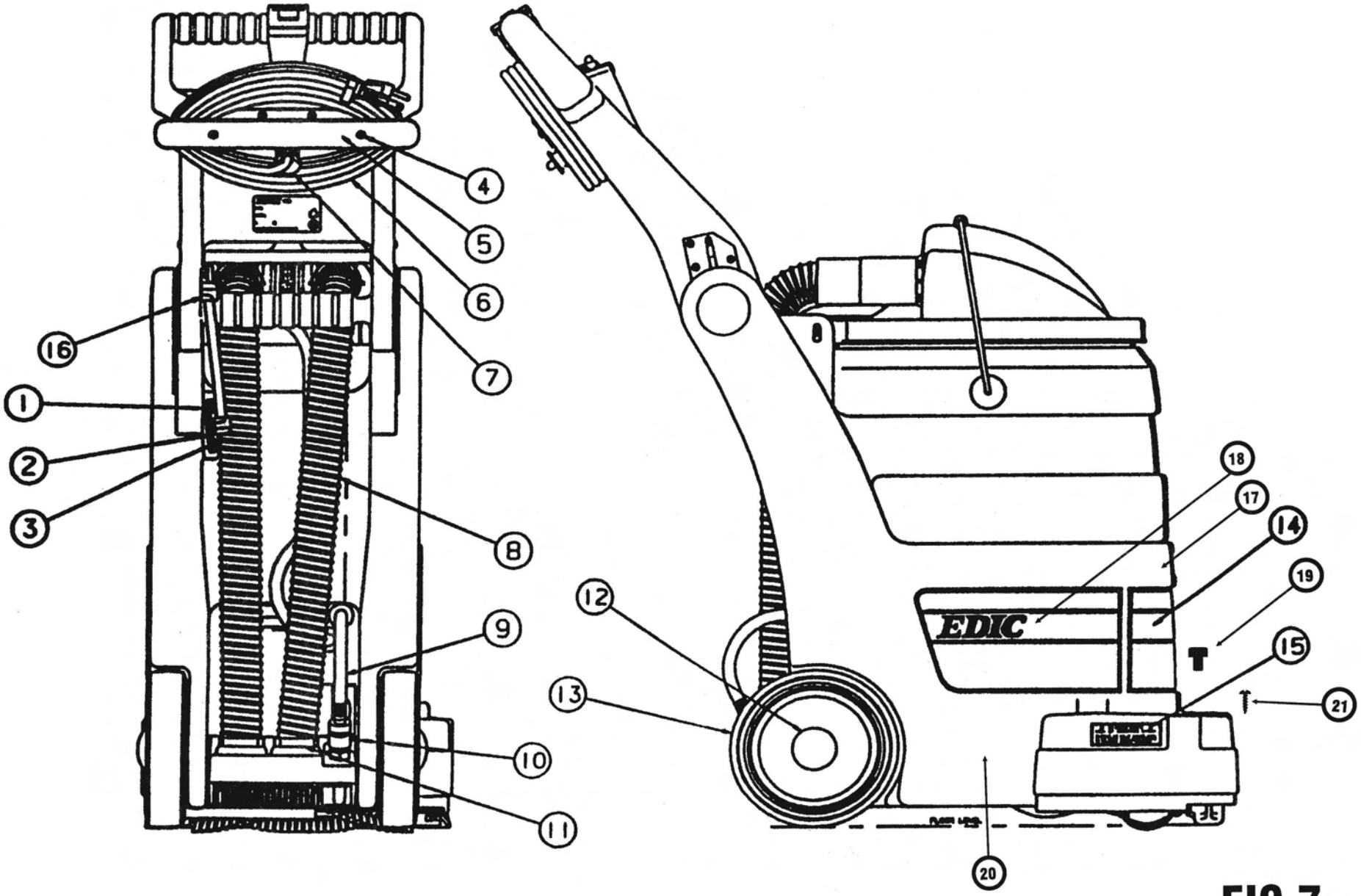

FIG.7

EDIC PARTS LIST

ITEM #	PART #	DESCRIPTION	QTY.	FIG.
1	C90006	SCREW, 6-32 X 3/4, PHILLIPS PAN HEAD, BLACK OXIDE	4	7
2	D10618	PLATE, STRAIN RELIEF, BLACK	2	7
3	E10723	GASKET, STRAIN RELIEF	2	7
4	COO311	8-32 X 3/8 ROUNDEHEAD MACHINE, BLACK PHILLIPS SS	2	7
5	D10501	PLATE, CORD WRAP, BLACK	1	7
6	B10719	POWER CORD, 3/16 AWG, 300VAC, SJTO, 20', BLACK, W/NEMA 5-15 PLUG AND CORD CLIP	1	7
7	B02215	STRAIN RELIEF, BLACK TRUMPETED, 14-18 GA	1	7
8	J00618-1	1 1/2 WIRE SUPPORTED GRAY, WIRE REINFORCED	6	7
9	10531A	ASSY., HOSE, QUICK CNNCT	1	7
10	A00109	QUICK DISCONNECT 1/8 SOCKET X 1/8 FP BL	1	7
11	J00656	CLAMP, HOSE, 1 1/2" NYLON, REUSABLE, BLACK	2	7
12	G10458-2	CAP, WHEEL HUB, BLACK	2	7
13	G10458	WHEEL, 7 INCH, NO BEARING /375" BORE, GREY	2	7
14	H10727	LABEL, CENTER, WRAPAROUND,EDIC	1	7
14A	H10727-1	LABEL, CENTER, WRAPAROUND, (400TR)	1	7
15	H10577	LABEL, CAUTION, RISK OF ELECTRIC SHOCK, 1'X 2.875	1	7
16	B10734	STRAIN RELIEF, CORD, MAIN HARNESS	2	7
17	H10728	LABEL, MOTOR HOUSING, RIGHT, EDIC	1	7
17A	H10728	LABEL, MOTOR HOUSING, RIGHT,(400TR)	1	7
18	H10729	LABEL, MOTOR HOUSING, LEFT, EDIC	1	7
18A	H10729-1	LABEL, MOTOR HOUSING, LEFT,(400TR)	1	7
19	K10510	PLUG, HOLE 1"	2	7
20	F10541	MOTOR HOUSING (400TR)	1	7
20A	F10541-1	MOTOR HOUSING EDIC BLUE	1	7
20B	F10541-2	MOTOR HOUSING PURPLE	1	7
20C	F10541-3	MOTOR HOUSING BLACK	1	7
20D	F10541-4	MOTOR HOUSING K-BLUE	1	7
20E	F10541-5	MOTOR HOUSING K-GREY	1	7
21	C90007	SCREW, 10-32 X 5/8" PHILLIPS	2	7

3 GALLON MODEL

115 V AC, 60 HZ
WIRING DIAGRAM, NO.10550

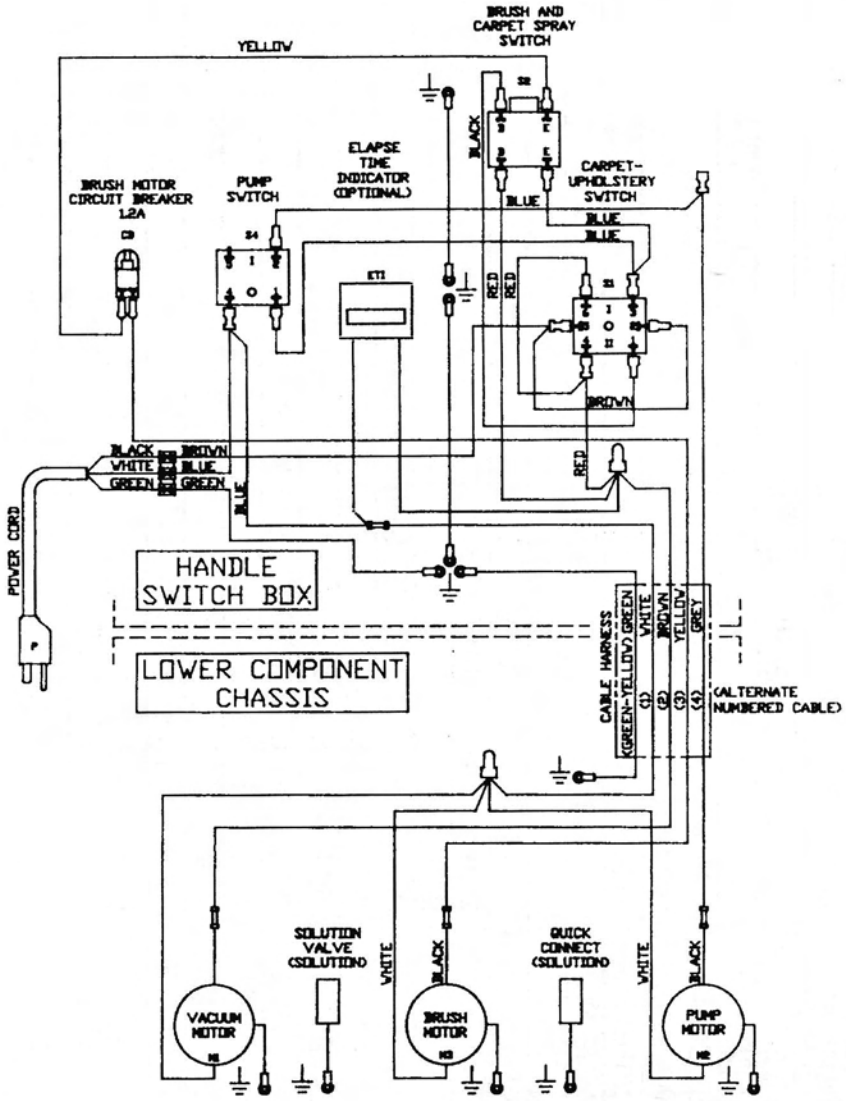

HOUR METER (OPTIONAL)
FLOJET BRUSH MOTOR
PUMP SWITCH
2 STAGE VAC, HIGH PERFORMANCE
16 AWG POWER CORD
5 WIRE, 16 AWG CABLE HARNESS
SOLUTION CONTROL VALVE (OPTIONAL)

REVISIONS

REV	CHANGE ORDER NUMBER	DATE	APPROVED
#1		6/17/95	
#2		9/26/96	
#3		2/27/97	
#4		3/27/97	

NEXT ASSY | USED ON

DO NOT SCALE DRAWING

UNLESS OTHERWISE SPECIFIED DIMENSIONS ARE IN INCHES TOLERANCES ON DECIMAL ANGLES ±1°

MATERIAL | FINISH

DRAWN S.SORKOTIZKIH 6/17/95 | CHECK | APPR | APPR

APPROVALS | DATE

EDIC ENGINEERING DIVISION 1753 BLAKE AVENUE LOS ANGELES, CA 90031

DIAGRAM, WIRING, 115 VAC, 60 HZ 3 GAL, EDIC

SCALE | B | PART NO. | DWG NO. 10550 | REV #4

SHEET 1 OF 1

SHEET 1 OF 1 | REV #4 | DWG NO. 10550 | PART NO. | B

NOTES

NOTES

1753 Blake Avenue ❑ Los Angeles, CA 90031 ❑ (800) 338-EDIC, or in CA (323) 660-1635 ❑ FAX (323) 667-0144